Product Information Packet

Model AHP-3254XHC

Solid State, NEMA 4-X, Heat/Cool, Air Conditioner
3 Phase, 208 VAC, 4 Wire Wye
with TC-7F Temperature Control

Part #0-I4IE-3-000

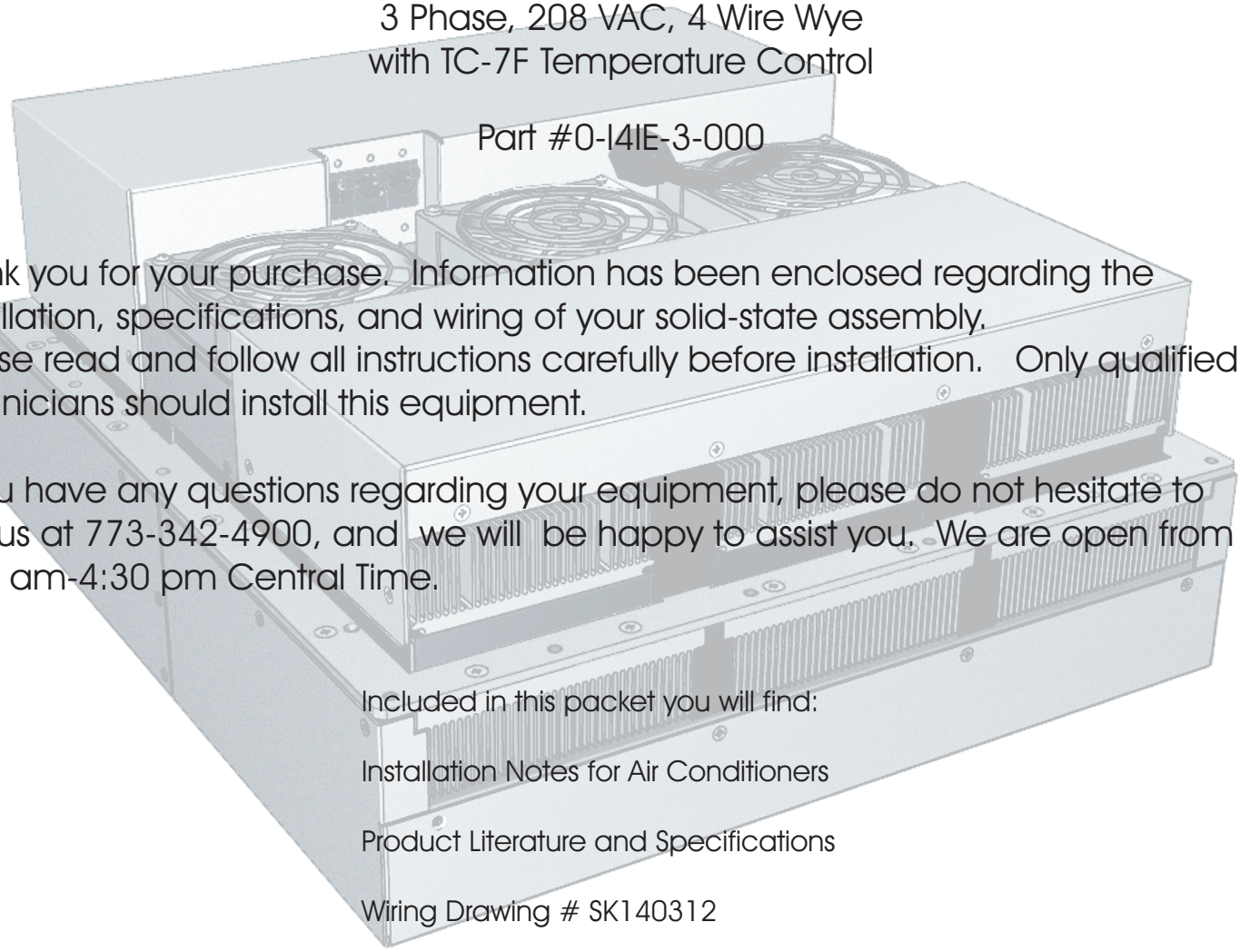

Thank you for your purchase. Information has been enclosed regarding the installation, specifications, and wiring of your solid-state assembly.
Please read and follow all instructions carefully before installation. Only qualified technicians should install this equipment.

If you have any questions regarding your equipment, please do not hesitate to call us at 773-342-4900, and we will be happy to assist you. We are open from 8:00 am-4:30 pm Central Time.

Included in this packet you will find:

Installation Notes for Air Conditioners

Product Literature and Specifications

Wiring Drawing # SK140312

Installation Drawing # SK131040

Temperature Control Information

Warranty Information

teca
ThermoElectric Cooling America Corporation
4048 W. Schubert Avenue • Chicago, IL (U.S.A.) 60639
Ph: 773/342-4900 Fx: 773/342-0191
sales@thermoelectric.com www.thermoelectric.com

Important Installation Notes for Air Conditioners

Mounting Styles: Both 'thru mount' and 'flush mount' units can be positioned in any orientation and on any enclosure surface. It is important to consider interior air flow patterns when determining the mounting location. Also of importance is an unrestricted flow of ambient air thru the hot side heat exchanger. Ease of access and inspection must be considered for those applications in particularly severe environments which may require occasional maintenance.

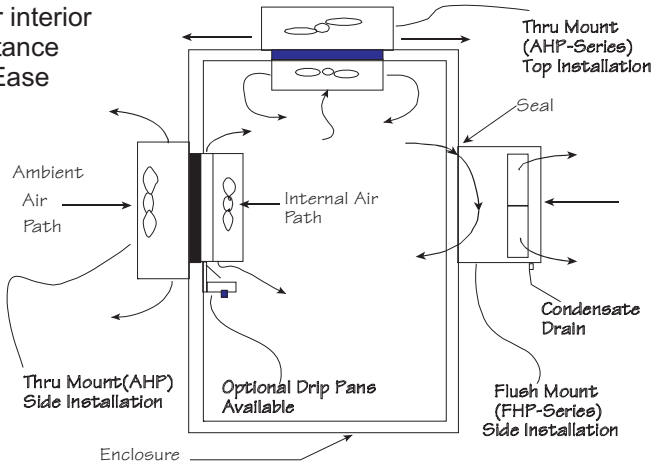

Vertical (Side/Front/Back) Mounting:

Vertical mounting refers to the vertical direction of the cold side or interior fins and is recommended for applications with high humidity, poor and incomplete cabinet seals or any condition which may cause the cold side fins to be maintained at temperatures below the dew point for long periods of time allowing for the formation of condensation. The vertical fin direction provides a drip path whereupon condensation can be collected via a moisture removal system (standard on FHP-units) or a drip pan positioned below the cold side fins. Drip pans are optional for thru mount units.

Condensate Removal System:

All FHP-Series and AHP-1400 air conditioners contain a built-in condensate removal system. The condensate kit consists of a antifungal sponge with a condensate wick. PVC tubing is also provided for drainage. Drip pans are optional for thru mount units which must be evaluated on an individual basis. Equations defining a relationship between the cold side fin and enclosure temperatures are provided to assist in the evaluation.

Top Mounting:

Though often the easiest location to mount it is often the most difficult to protect from condensation in this orientation due to the fin orientation, gravity and any susceptible components below. If a drip pan is employed by the end user use caution to place the pan far enough away from the internal fan to minimize the restriction of air flow. The pan should cover the fin ends as well as the fan area. When there is a choice, the vertical orientation is preferred by most users.

Maintenance:

Since the technology is solid-state, there are no filters, compressors, or fluorocarbons to maintain. The only moving parts are the fans. It is recommended for harsh or dirty environments that the heat sinks be cleaned from time to time. This can be accomplished by directing compressed air over the external fins or on NEMA 4 versions by hosing the unit down. This will increase the overall life and performance of the system.

Cautions:

Take care when mounting not to damage the seal between the hot and cold side sinks. Do not attempt to mount a unit to a warped surface or try to make the units mounting surface conform to an unflat surface. Do not pinch or damage any leads when mounting. Do not over tighten any installation screw, use reasonable force. Always mount with any condensate drain down. Do not compress the cold side between the hot side and any other surface. Do not obstruct the airflow on either side. When mounting consider the natural air flows of the enclosure. Connect power only after the installation is complete.

Notes on condensation:

Condensation occurs at the cold side fins when the surface temperature goes below the dew point. To reduce or remove condensate, consider the following:

- Regulate the Fin Temperature above the Dewpoint.
- Keep Enclosure Closed and Sealed from Outside Humidity.
- Use Desiccant (Moisture absorbing Granules.)
- Employ Condensate Removal System/Drip Pans.

If you have any questions regarding your installation, Please feel free to contact our technical department for assistance at 773-342-4900.

AHP-3254 | Air Conditioner/Heat Exchanger

Air Cooled
Through Mounted
Nema-12, 4, 4X

3 Phase, 208 VAC, 4 Wire Wye
High Efficiency
2686 BTU/HR

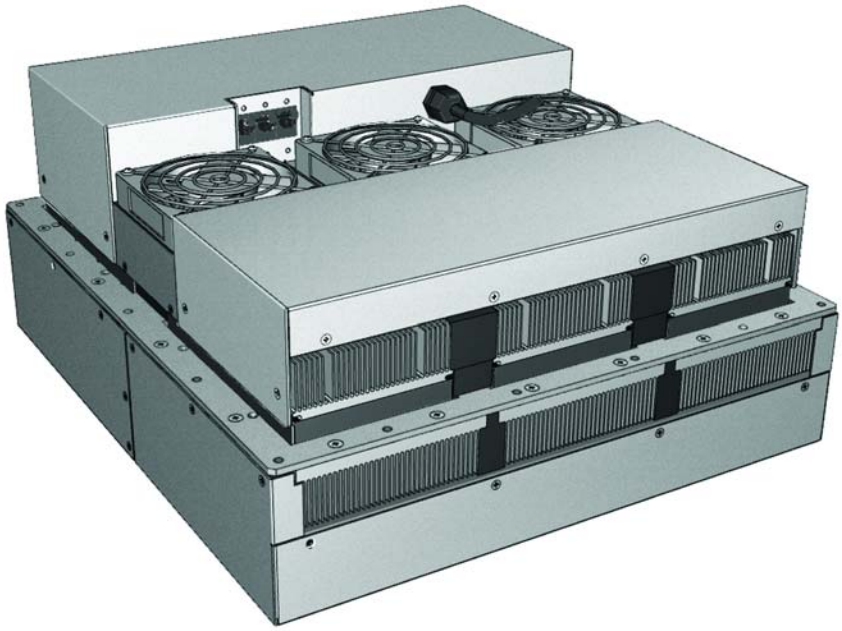

FEATURES

- High capacity thermoelectric design
- Power saving air to air heat exchanger mode (ECO-Mode)
- Heavy duty full perimeter mounting
- Lower profile intrusion into enclosure
- Central input cord for easy mounting
- Closed loop design
- Condensate control and evaporation system
- Increased efficiency at higher ambients by as much as 10%
- Virtually maintenance free
- No compressor
- Environmentaly friendly and safe
- Stainless Steel exterior housing
- Mounts and operates in any orientation
- Integral temperature controller
- Weight 88 LBS.

CONTROL TEMPERATURES

Active Cooling	35 °C
Heat Exchanger (ECO-Mode)	25 °C
Active Heating	10 °C
Typical Hysteresis	5 °C
Operating Ambient	-40/+65 °C
Operating Enclosure	-10/+60 °C

POWER INPUTS

Voltage, 3 Phase Wye	208 VAC
Current, Active (per phase)	2.6 AMPS
Current , ECO-Mode	0.70 AMP
Frequency	50/60 Hz

PERFORMANCE RATINGS

Cooling (Traditional)	2686 BTU/HR
Cooling (Din 3168)	787 WATTS
Cooling COP (at L35 L35)	0.84
Heating (Traditional)	> 3294 BTU/HR
Heating (Din 3168)	> 937 WATTS
Heating COP	> 1.0
Heat Exchanger (ECO-Mode)	18 W/°C

INCLUDES

- Power supply
- Temperature controller
- Power saving heat exchanger mode (ECO-Mode)
- Mounting gasket
- Mounting hardware
- Power input cord
- Circuit breaker

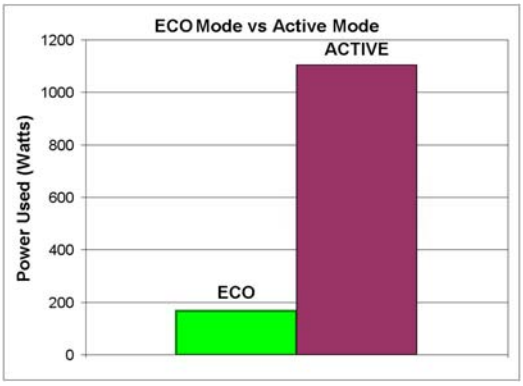

CONFIGURATIONS

MODEL	PART NUMBER	NOTES	TEMPERATURE CONTROL	ENVIRONMENT
AHP-3254	0-I4JE-0-000	Cool only, industrial fans & power supply	TC-4F	NEMA-12, IP 52
AHP-3254HC	0-I4IE-1-000	Heat/Cool, industrial fans & power supply	TC-7F	NEMA-12, IP 52
AHP-3254XE	0-I4JE-4-000	Cool only, sealed hot side fans & power supply	TC-4F	NEMA-4, IP 56
AHP-3254XEHC	0-I4IE-5-000	Heat/Cool, sealed hot side fans & power supply	TC-7F	NEMA-4, IP 56
AHP-3254X	0-I4JE-2-000	Cool only, Mil. grade hot side fans & power supply	TC-4F	NEMA-4X, IP 56
AHP-3254XHC	0-I4IE-3-000	Heat/Cool, Mil. grade hot side fans & power supply	TC-7F	NEMA-4X, IP 56

AHP-3254

PERFORMANCE CURVE

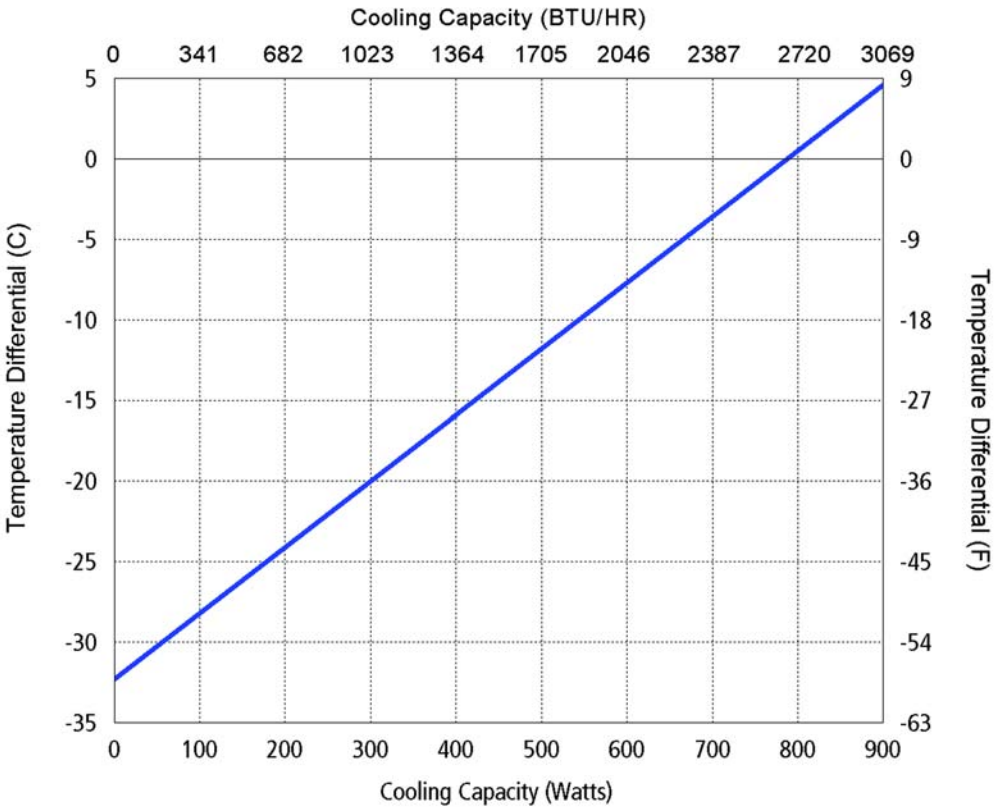

Equation of line: y=ΔT(°C) x=Capacity (Watts)	
Enclosure Air	y=.041x-32.3
Cold Sink	y=.030x-32.3

MOUNTING STYLE

Through Mounted

ENVIRONMENTS SERVED

NEMA-12 IP 52

NEMA-4,4X IP 56

RATING (TRADITIONAL)

2686 BTU/hr @ 0 °F ΔT

3610 BTU/hr @ +20 °F ΔT

RATING (DIN 3168)

788 Watts L35 L35

420 Watts L35 L50

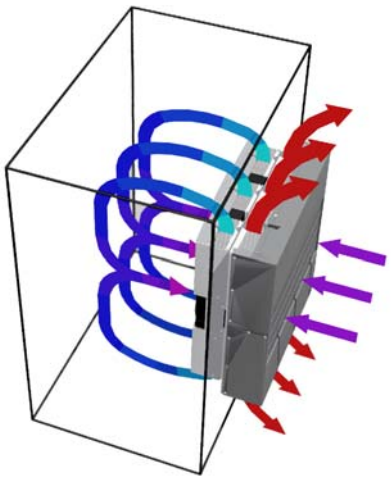

Air Flow Pattern

DIMENSIONS

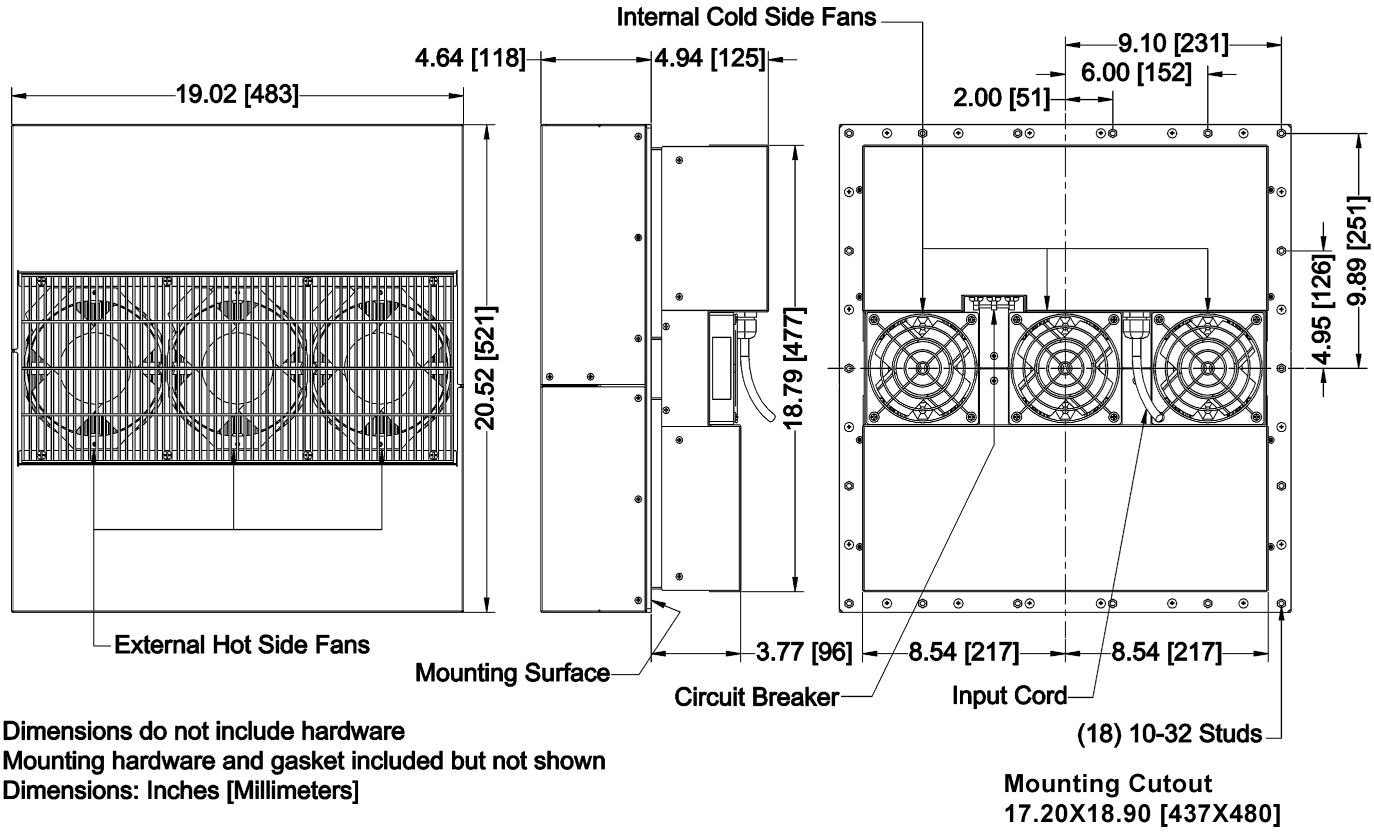

Dimensions do not include hardware
Mounting hardware and gasket included but not shown
Dimensions: Inches [Millimeters]

Mounting Cutout
17.20X18.90 [437X480]

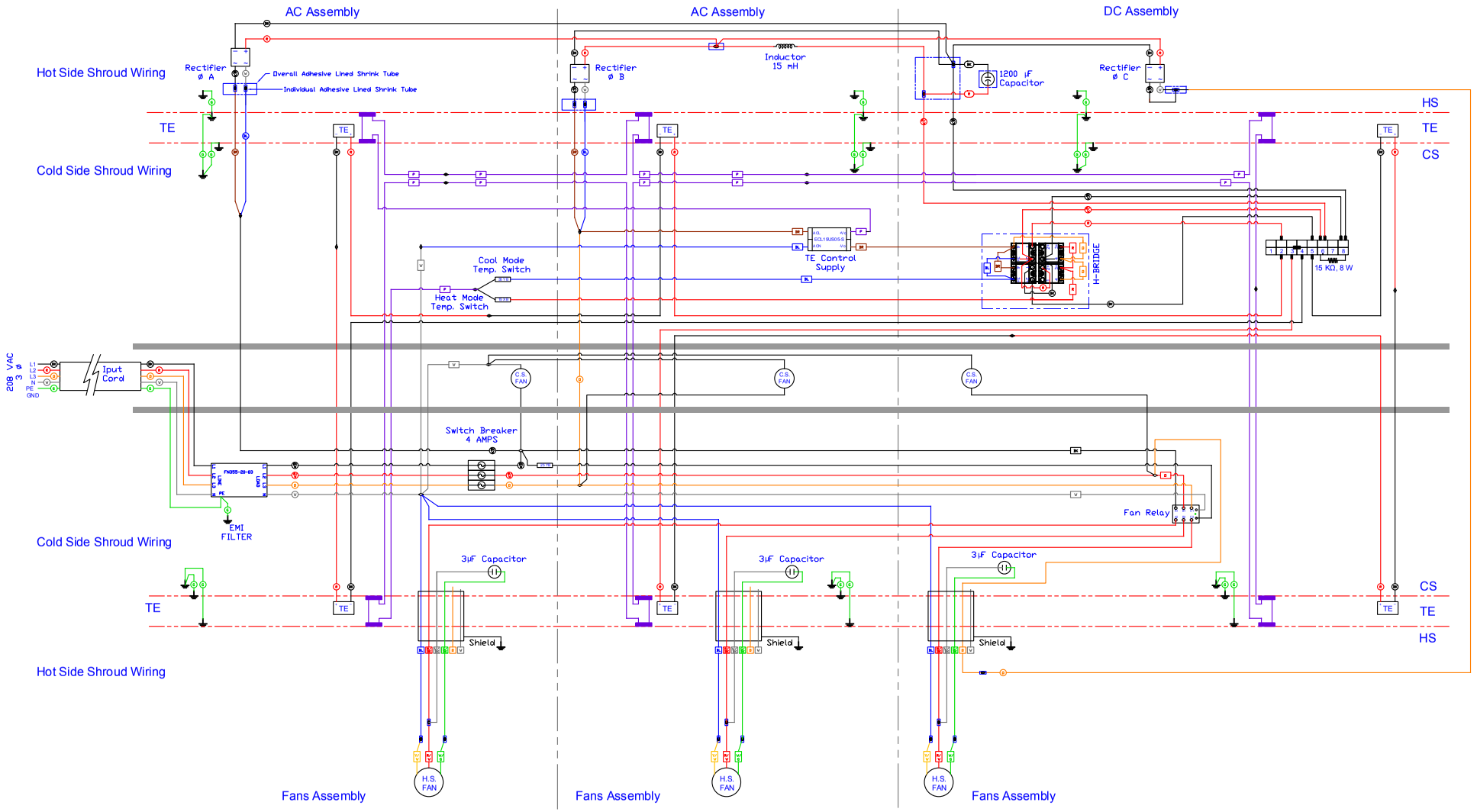

- Indicates 18 AWG wire
- Indicates 20 AWG wire
- Indicates Plenum wires
- Indicates small closed end splice
- Indicates large closed end splice
- Indicates Red Fork terminal
- Indicates solder and shrink tube connection
- Indicates overheat safety thermostat (hot side 94 °C; cold side 75 °C)

REV	DESCRIPTION	Date	APPROVED

INFORMATION DISCLOSED HEREIN IS THE CONFIDENTIAL PROPERTY OF TECA CORP. RECIPIENT SHALL NOT USE THE INFORMATION IN ANY UNAUTHORIZED MANNER.

UNLESS OTHERWISE SPECIFIED DIMENSIONS ARE IN INCHES
TOLERANCES ARE:
DECIMALS .XX +/- .XXX+/-
ANGLE +/-
FRACTION +/-

FINISH:
MATERIAL:

THERMOELECTRIC COOLING AMERICA CORP.

AHP-3254XHC WITH TC-7F
WIRING DIAGRAM

DRAWN BY:	DRAWING #	REV LEVEL
AA	SK140312	
DATE: 03/07/2013		
D9050	SCALE	MASTER: MASTER
		SHEET

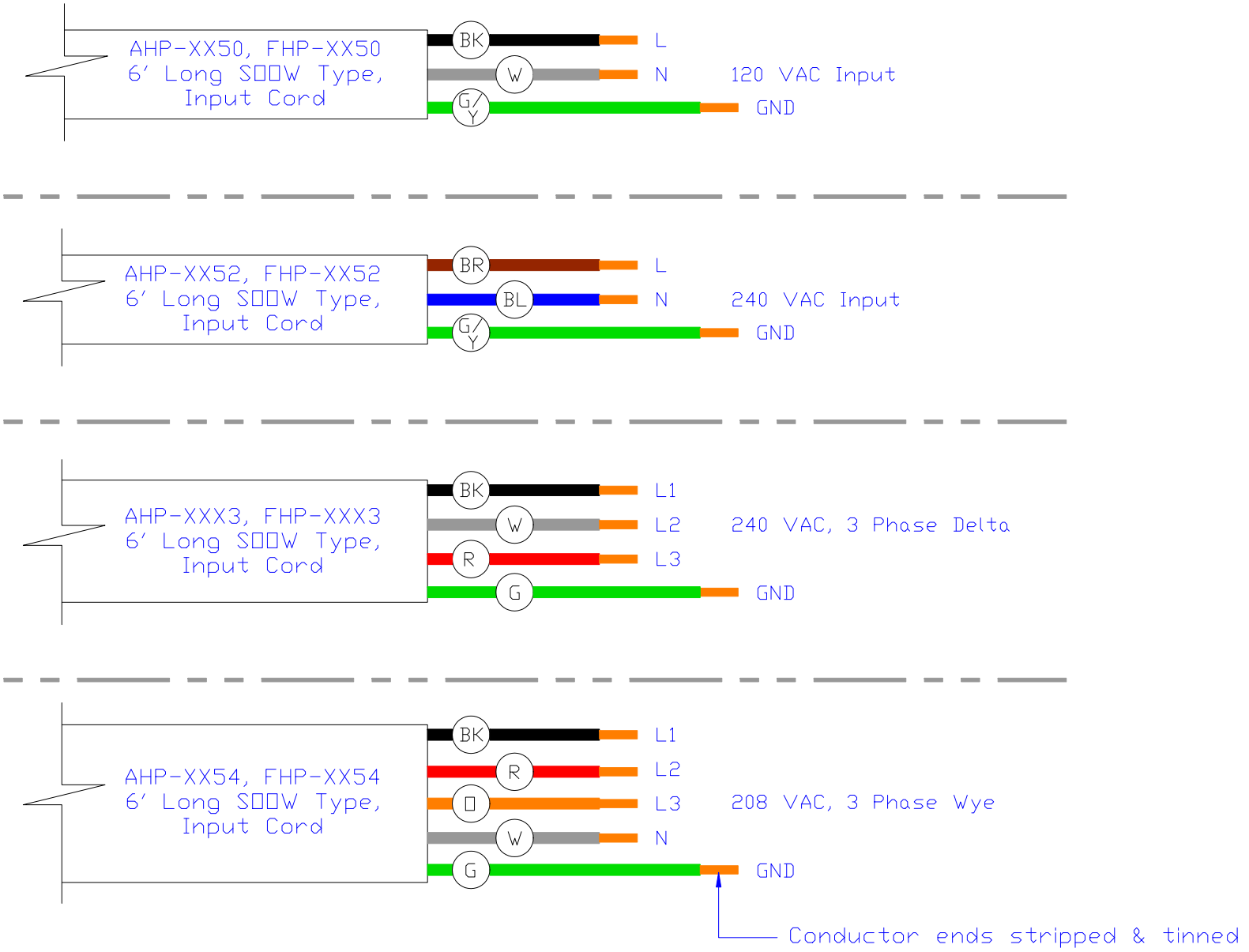

REV	DESCRIPTION	Date	APPROVED

INFORMATION DISCLOSED HEREIN IS THE CONFIDENTIAL PROPERTY OF TECA CORP. RECIPIENT SHALL NOT USE THE INFORMATION IN ANY UNAUTHORIZED MANNER.

UNLESS OTHERWISE SPECIFIED
DIMENSIONS ARE IN INCHES
TOLERANCES ARE:

DECIMALS	ANGLE
.XX +/-	+/-
.XXX+/-	FRACTION +/-

FINISH:

MATERIAL:

THERMOELECTRIC COOLING AMERICA CORP.

HIGH CAPACITY SERIES
INPUT CORD TERMINATION

DRAWN BY: AA
DATE: 04/10/2014
D9122

DRAWING # SK140431

REV LEVEL

SCALE

MASTER: MASTER

SHEET

Mounting, Monture, Montage, Montaggio

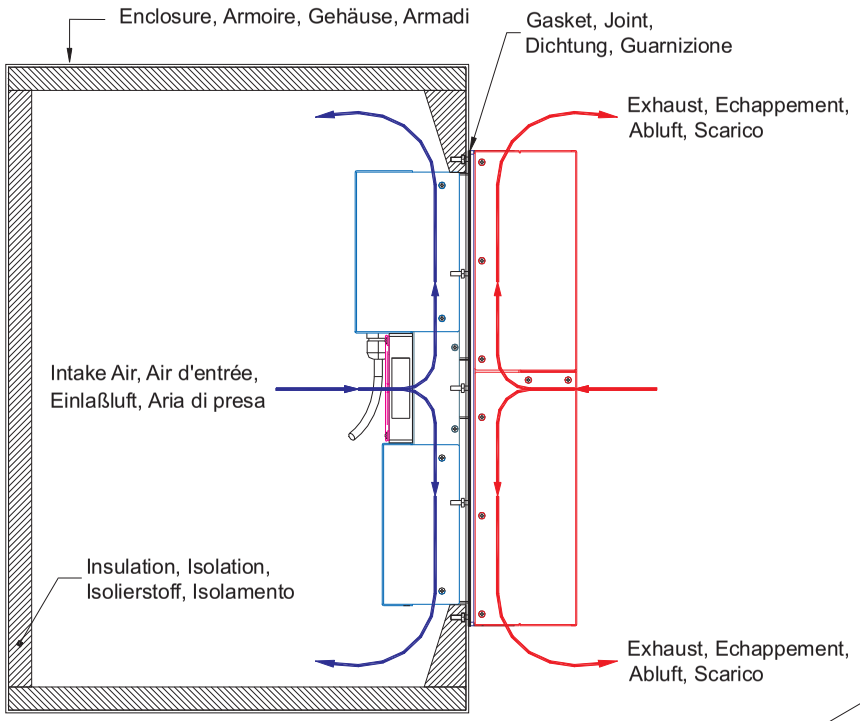

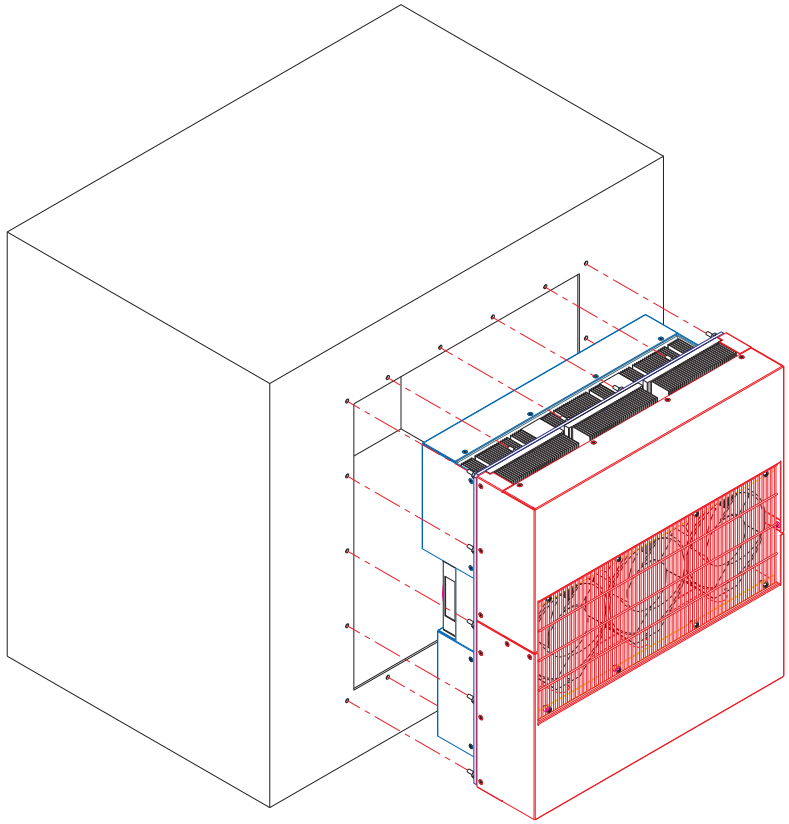

MOUNTING CUTOUT DIMENSIONS

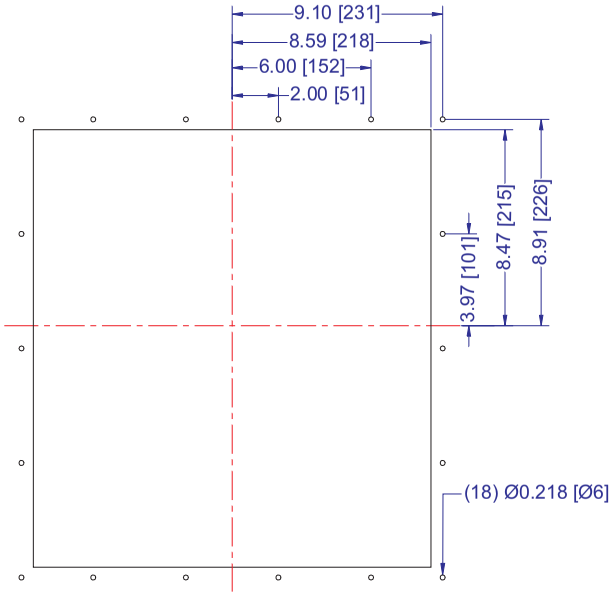

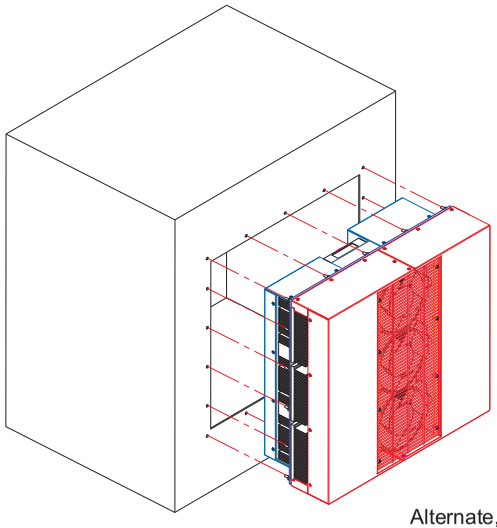

Alternate, Alternative,
Alternative, Alternativa

English, Français, Deutsch, Italiano
Dimensions: Inches [Millimeters]

REV	DESCRIPTION	Date	APPROVED

INFORMATION DISCLOSED HEREIN IS THE CONFIDENTIAL PROPERTY OF TECA CORP. RECIPIENT SHALL NOT USE THE INFORMATION IN ANY UNAUTHORIZED MANNER.

UNLESS OTHERWISE SPECIFIED DIMENSIONS ARE IN INCHES
TOLERANCES ARE:

DECIMALS	ANGLE
.XX +/-	+/-
.XXX+/-	FRACTION +/-

FINISH:

10/19/2012

MATERIAL:

THERMOELECTRIC COOLING AMERICA CORP.

AHP-3253 / AHP-3254
TYPICAL FIELD MOUNTING

DRAWN BY: AA

DATE: 10/28/2013

DRAWING # SK131040

REV LEVEL

D8904

SCALE

MASTER: MASTER

SHEET

TC-1F POWER TEMPERATURE SWITCHES

Models TC-1F power temperature controller, with small tolerance and reset differential, are the simplest and most cost effective way to control a cooling or heating device (VAC or VDC) without a need for a relay. For circuits that have higher current draw simply use them in conjunction with a solid state relay.

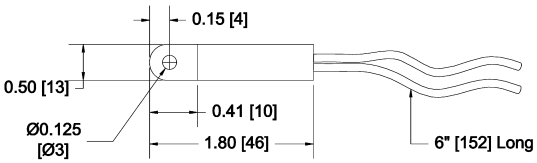

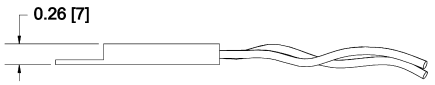

Dimensions: Inches [Millimeters]

Part Numbers:

Mode	Part Number	Note
Cool	TC-1C-**XX**	switch closes on temperature rise
Heat	TC-1H-**XX**	switch closes on temperature drop

XX: Specify temperatures 20 °C, 25 °C, 30 °C, 35 °C for cool mode and 10°C, 15 °C for heat mode

Example: TC-1C-20 and TC-1H-10

VOLTAGE	CURRENT AMPS	SET POINT T OLERANCE °C	RESET DIFFERENTIAL °C
125 VAC	2	+/- 3	3 - 6
250 VAC	1.3	+/- 3	3 - 6
12 VDC	2	+/- 3	3 - 6
24 VDC	1.3	+/- 3	3 - 6

TC-4F COOL ONLY WITH ECO-MODE

Model TC-4F is simillar to TC-1F plus it has a 2nd power switch for heat exchanger mode (ECO-Mode). The active cool set point for TC-4F is 35 °C and for heat exchanger mode (ECO-Mode) is 25 °C.

MODEL NUMBER	PART NUMBER	NOTES	HX TEMP. °C	COOL TEMP. °C	RESET (MAX) °C	RESET (TYP) °C	OPERATING VOLTAGE	SWITCHING VOLTAGE	ACTIVE MODE SWITCHING CURRENT	ECO-MODE SWITCHING CURRENT
TC-4F-DC	4F-24G-00-000	24 VDC	25 +/- 3	35 +/- 3	6.5	3	24 VDC	24 VDC	.02 - 20 ADC	1.3 ADC

TC-6F COOL ONLY

Model TC-6F (Cool Only) thermostat is designed using two temperature power switches in conjunction with a solid state relay. A three position switch is provided to adjust temperature settings.

MODEL NUMBER	PART NUMBER	NOTES	TEMP @ T1 °C	TEMP @ T2 °C	T1-T2 (MAX) °C	RESET (TYP) °C	RESET °C	TEMP @ T3	OPERATING VOLTAGE	SWITCHING VOLTAGE	SWITCHING CURRENT
TC-6F	6F-00A-00-000	No Relay	35 +/- 5	25 +/- 5	10 +/- 3	6.5	3	Continuous On	NA	NA	NA
TC-6F-AC	6F-03T-00-000	VAC Version	35 +/- 5	25 +/- 5	10 +/- 3	6.5	3	Continuous On	85-250 VAC	24-280 VAC	10
TC-6F-DC	6F-43D-00-000	12/24 VDC	35 +/- 5	25 +/- 5	10 +/- 3	6.5	3	Continuous On	12/24 VDC	0-100 VDC	.02-20 ADC
TC-6F-DC	6F-33D-00-000	48 VDC	35 +/- 5	25 +/- 5	10 +/- 3	6.5	3	Continuous On	48 VDC	0-100 VDC	.02-20 ADC

TC-3F HEAT AND COOL

Model TC-3F (Heat/Cool) thermostat incorporates the same technology as the TC-6F. It contains a single setting each for both heating and cooling as referenced below:

MODEL NUMBER	PART NUMBER	NOTES	COOL TEMP. °C	HEAT TEMP. °C	RESET (MAX) °C	RESET (TYP) °C	OPERATING VOLTAGE	SWITCHING VOLTAGE	SWITCHING CURRENT
TC-3F-AC	3F-04R-00-000	VAC Version	35 +/- 5	15 +/- 5	6.5	3	85-280 VAC	24-280 VAC	10 AMPS
TC-3F-DC	3F-44G-00-000	12/24 VDC	35 +/- 5	15 +/- 5	6.5	3	3.5-32 VDC	0-100 VDC	.02 - 20 ADC
TC-3F-DC*	3F-44P-00-000	12/24 VDC	35 +/- 5	15 +/- 5	6.5	3	3.5-32 VDC	0-100 VDC	.02 - 20 ADC

* H-Bridge relays included

TC-7F HEAT/COOL WITH ECO-MODE

Model TC-7F (Heat/Cool) thermostat incorporates the same technology as the TC-3F. It contains a single setting each for both heating and cooling and a heat exchanger mode (ECO-Mode).

MODEL NUMBER	PART NUMBER	NOTES	COOL TEMP. °C	HX TEMP. °C	HEAT TEMP. °C	RESET (MAX) °C	RESET (TYP) °C	OPERATING VOLTAGE	SWITCHING VOLTAGE	SWITCHING CURRENT
TC-7F-DC	7F-24G-00-000	24 VDC	35 +/- 3	25 +/- 3	10 +/- 3	6.5	3	24 VDC	24 VDC	.02 - 20 ADC

H-Bridge relays included

For custom variations of any of the controls, contact TECA.

LIMITED WARRANTY

In the event a defect in material or workmanship is discovered in any of TECA's products within one year after the date they are delivered to Buyer, and if: (a) TECA is notified of the defect in writing by certified mail within 14 days of the date of discovery; (b) TECA may then either, at its sole discretion, inspect the product at Buyer's location, or require that the product be made available at Buyer's expense at TECA's premises for TECA's inspection within 14 days of the date of notification; and (c) the products are defective and the defects result from faulty materials and/or workmanship and not in any way from accident, misuse, misapplication, mishandling, modification, or alteration by the Buyer or the shipper, then TECA shall, at its sole option, repair or exchange defective products free of charge to Buyer, or credit to buyer the price of the defective products. ALL OTHER WARRANTIES, EXPRESS OR IMPLIED, ARE EXCLUDED, INCLUDING BUT NOT LIMITED TO THE IMPLIED WARRANTIES OF MERCHANTABILITY AND FITNESS FOR A PARTICULAR PURPOSE. IN NO EVENT SHALL TECA BE LIABLE FOR ANY CLAIM BASED UPON BREACH OF EXPRESS OR IMPLIED WARRANTY OR ANY OTHER DAMAGES WHETHER SPECIAL, INDIRECT, INCIDENTAL, CONSEQUENTIAL, LOST PROFITS, BUSINESS INTERRUPTION, OR LOSS OF BUSINESS OR CUSTOMER RELATIONSHIPS.

RETURNED GOODS, RESTOCKING CHARGES

In order to return merchandise for any reason (repair, replacement, or credit) a return authorization number must be issued by TECA. New merchandise may not be returned for credit beyond 60 days from shipment. Charges for incidental or other damages may also be made. All returned goods must be sent freight prepaid. A restocking charge of 15% will apply. On special equipment and custom modified equipment orders, additional incremental cancellation charges may be made.